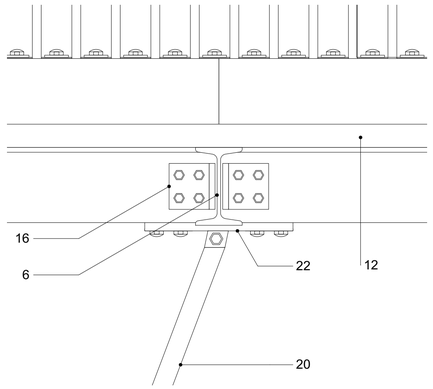


## A_310.0 Section Through Support
SCALE 1:50@ A1, 1:10 @ A3

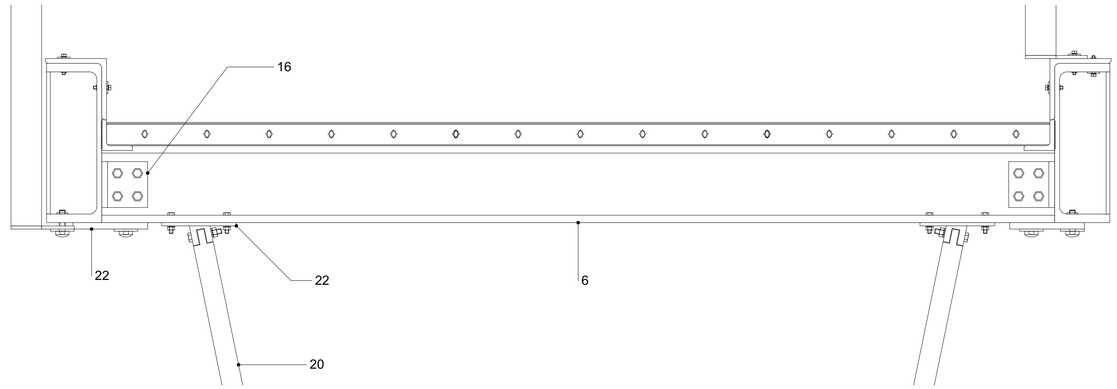


## A_310.1 Long Section Through Support
SCALE 1:50 @ A1, 1:100 @ A3

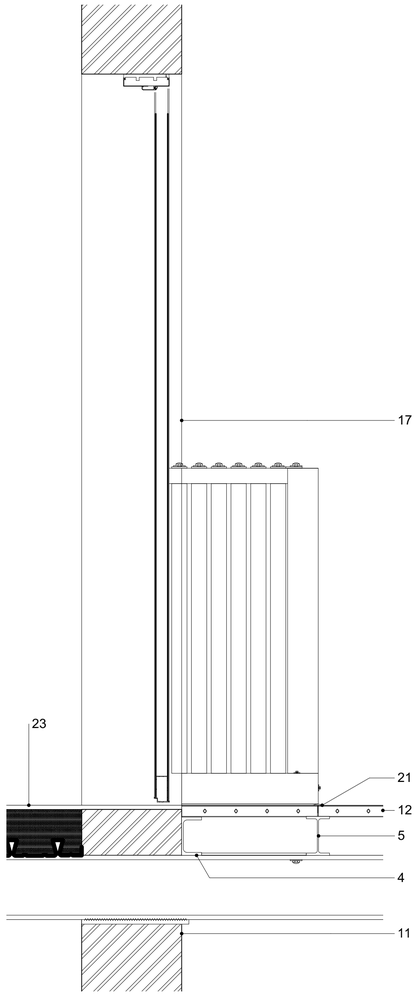


## A_310.3 Section Through Landing
SCALE 1:50 @ A1, 1:100 @ A3

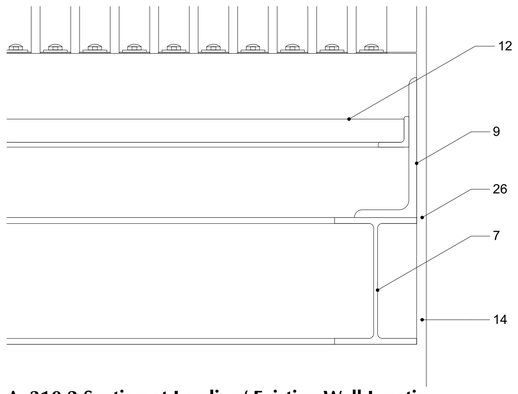


## A_310.2 Section at Landing/ Existing Wall Junction
SCALE 1:50 @ A1, 1:100 @ A3

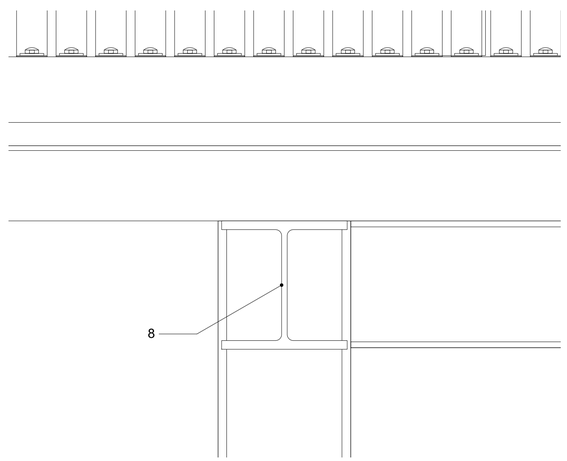


## A_310.4 Section Through Front of Landing
SCALE 1:50 @ A1, 1:100 @ A3

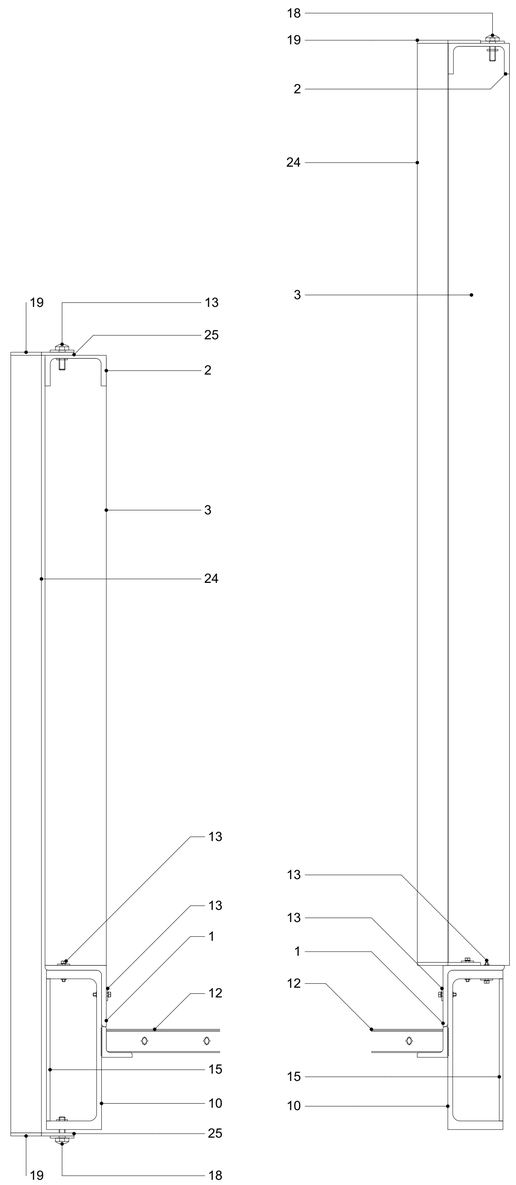


## A_310.5 Terracotta Guarding Detail
SCALE 1:50 @ A1, 1:100 @ A3

Notes:

Responsibility is not accepted for errors made by others scaling from this drawing.

All construction information should be taken from figured dimensions only. Dimensions are in millimetres unless otherwise stated.

All dimensions and conditions are to be checked on site prior to preparing drawings or commencing any work.

Any variations or supplementary drawings are to be approved by The Architect.

General Notes
1. STRUCTURAL STEEL:
   - All dimentions are nominal and are to be discused with Architect/ Structural Engineer prior to order.
   - Structural Engineer is to be consulted before cutting and welding steel members.
   - Galvanized fixings to be used only.
   - Steel parallel flange channel has maximum length of 7500mm.
2. TERRACOTTA BAGUETTES:
   - To be used with fittings approved by ArGeTon only.
   - Stored in an appropriate area on site to avoid chipping, cracking and damage.
   - Must be cut at right angles only.
   - Installed by a specialist fitter approved by ArGeTon/ Taylor Maxwell.

Notes
1. 100 x 100 x 8 mm EA 150 long welded to uprights. G10.110.
2. 100 x 50 x 10 PFC (togs down). G10.135.
3. 100 x 75 mm RHS uprights at 1800mm centres. G10.130.
4. 125 x 65 x 15 PFC fixed to steel beam below.
5. 127 x 76 x 13 structural steel beam.
6. 127 x 76 x 16 mm structural steel beam spaning between PFC's, fixed with splice and cleat.
7. 203 x 133 x 30 structural beam.
8. 203 x 203 x 60 UB.
9. 229 x 102 x 12 unequal angle section bolted/ welded to beam below.
10. 260 x 90 PFC. G10.135.
11. 440mm cavity fin wall.
12. 38 mm Neaco NeatDek on 50 x 50 EA welded to PFC. L30.640.
13. 4 No mid bolts counter sunk into 100 x 100 EA.
14. 50 to 100 mm tolerance spacing between bridge and building to premote reversibility.
15. 6mm web stiffener centred on upright locations. G10.130.
16. 75 x 75 x 8 mm EA steel angle cleat bolted to each beam.
17. Aluminium framed glazed door.
18. Flat headed bolt.
19. EPDM pad.
20. Round hollow steel tubing bolted to steel connection which is welded to splice/ beam.
21. Rounded steel profile to infill void between NeatDek.
22. Structural steel splice fixed to beam with bolts. Structural integrity to be checked with Structural Engineer.
23. Tata Steel ComFlor 80. 150mm thick.
24. Terracotta Baguettes at 14.5 mm centers. H92.110.
25. Aluminium support profile with one Barro screw fixed to X-profile within baguette. H92.110.
26. Neoprene sheet fitted to new steel work to provent damage to existing masonry and allow expansion.

| NO. | DATE | REVISION |
|---|---|---|

CLIENT
CHRT

PROJECT
YMCA, Merthyr Tydfil

DRAWING TITLE
External Works Sheet 5

DAVIES SUTTON ARCHITECTS
Penhevad Studios • Penhevad Street
Grangetown • Cardiff • CF11 7LU
Tel: 029 2066 4455 • Fax: 029 2066 4411
E-mail: office@davies-sutton.co.uk
Web: www.davies-sutton.co.uk

| DRAWN/CHECKED | SCALE | DATE | DRAWING NO. | REV. |
|---|---|---|---|---|
| RhT/KS | Varies | June 16 | 3510 A_310 | - |

DO NOT SCALE FOR CONSTRUCTION PURPOSES • ALL DIMENSIONS TO BE CHECKED ON SITE • NOTIFY ARCHITECT OF ALL DISCREPANCIES • THIS DRAWING IS COPYRIGHT